ATOM-JET INDUSTRIES

agoulture
INTELLIGENT FARM SOLUTIONS

AG PRODUCT CATALOGUE

Seeding Openers
Disc Scrapers
Fertilizer Knives
Hydraulic Kits



ATOM-JET GUARANTEE







Atom-Jet and **AG Culture** have worked in cooperation for over 14 years, learning and working with farmers on the unique challenges of farming in Australia. Whether it be at field days, on-farm visits, or speaking with dealers, we have been on the ground developing an understanding of what Australian farmers want and need.

Atom-Jet is committed to providing the highest quality products and unmatched customer service. We do this by operating quality controlled manufacturing facilities, employing exceptional people, and partnering with qualified dealers. At the heart of this philosophy is the Atom-Jet 100% Money-Back Guarantee, which is not matched by any other opener manufacturer in the market today. Unlike other guarantees, ours is not prorated. If your agricultural product has not performed to your satisfaction within the first year (12 months from purchase) **our sales and service team, in cooperation with your local dealer, will come to your farm to correct the problem**. If they cannot, Atom-Jet will refund 100% of your money.*

*Atom-Jet Money-Back Guarantee: Atom-Jet will provide a 100% money back guarantee on openers purchased within one year of the ship date provided the following conditions are met; otherwise, the guarantee becomes null and void: 1. Atom-Jet is notified within 1 year from date of sale. **2. The Atom-Jet service team was granted access to resolve the concern at the time of occurrence.** 3. Openers were not operated under adverse tripping conditions (ie. 500+lbs. trip pressure) or in untillable conditions.

Visit **aus.atomjet.com** for videos and more information
1-800-573-5048 | **agriculture@atomjet.com**

AtomJetAg AtomJetAg AtomJetGroup

CONTENTS

Atom-Jet Agriculture Guarantee 2

Atom-Jet Advantage 4

Seed Placement 7

Things to Know 8

Research & Development 10

OPENERS FOR…

C-Shank 12

Australian C-Shank Openers 15

Morris Contour & Quantum 16

Bourgault Paralink 18

CNH Flex Hoe 20

Concord / CIH 700 / NH 2060 Edge On 22

Morris Maxim 24

John Deere 1870 ConservaPak 26

Australian Products 30

Hydraulic Systems – Closed-Center 32

Hydraulic Systems – Open-Center 34

Parts & Accessories 36

Customer Order Form 38



Trademarks registered by CIH Flex Hoe 800, CNH P2070 Flex Hoe, Morris Contour & Bourgault Mid-Row Banders are used with permission.
Atom-Jet openers are designed to fit OEM drills as replacement third-party products.

ATOM-JET ADVANTAGE

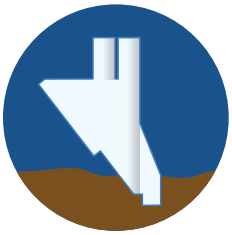

SOIL DISTURBANCE

- The shape and form of our vertical design causes the soil to be split, nearly eliminating the throw that comes with bulkier horizontal openers.
- This reduces the risk of not retaining enough soil to cover the seed, or causing stepping.



TRASH CLEARANCE

Our vertical design and rounded seed tube helps the trash to ride up the point and clear quickly without building up.

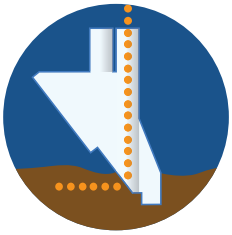

SEED AND FERTILIZER PLACEMENT

Our vertically designed opener has the ability to place the seed on a firm seedbed immediately after opening the soil, eliminating seed bounce and soil-bed fracturing.

- With our shorter profile, closure is achieved in a very short amount of travel, creating accurate seed placement.
- Competitors' horizontal design drives the seed against the direction of travel, resulting in seed bounce and poor overall placement.

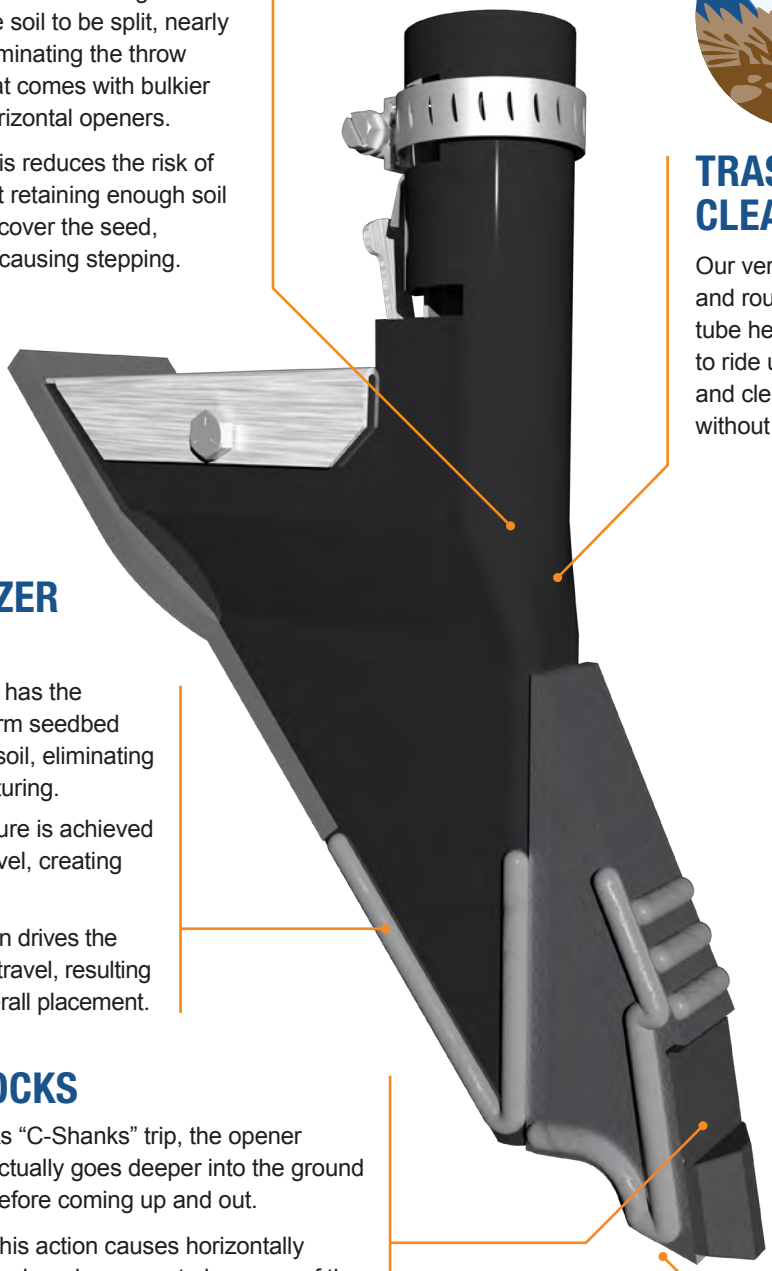

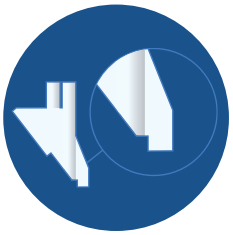

NO-PLUG TECHNOLOGY

Through vertical design, mud blockage and plugging have been virtually eliminated.

- The curved area under the point, or "mud spur", is made to inhibit soil from "orange peeling".
- Competitors' horizontal designs precipitate the mud curl travelling up and into the rear of the opener.



ROCKS

- As "C-Shanks" trip, the opener actually goes deeper into the ground before coming up and out.

  This action causes horizontally designed openers to be some of the best rock picking tools available.
- With our vertically designed opener, the point produces a shape that is more likely to float across the top of the stone, rather than pull it up.

Visit **aus.atomjet.com** for videos and more information
1-800-573-5048 | **agriculture@atomjet.com**

AtomJetAg AtomJetAg AtomJetGroup

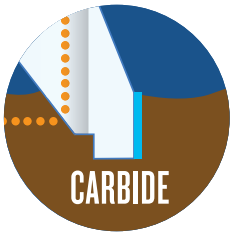

CARBIDES

- For over 30 years we have delivered the ultimate in tungsten carbide technology to producers around the globe.
- With continued research into carbide grade, shape, and installation techniques, we continue to provide the longevity our customers require.

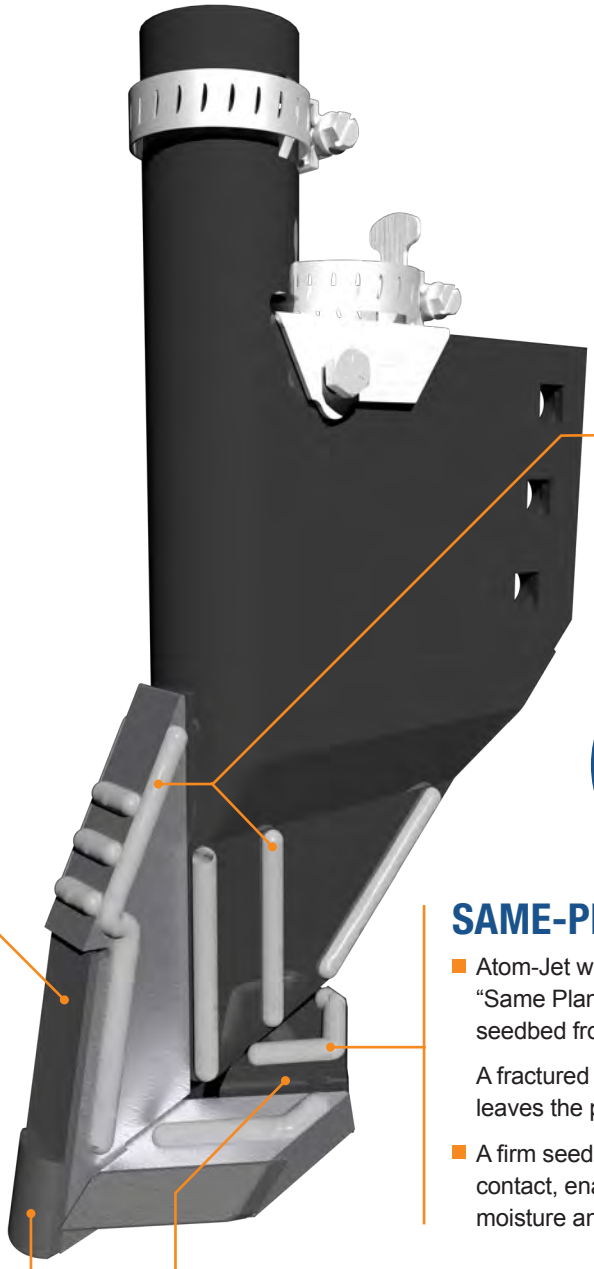

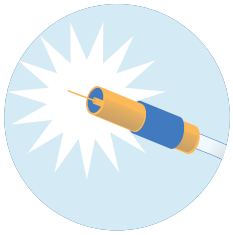

MAINTAINABLE

- Atom-Jet openers are formed from quality steel plate, and fortified with high-grade hard surfacing.
- All hard-surfacing can be renewed to its original condition. We recommend checking all beads after each season.



SAME-PLANE PLACEMENT

- Atom-Jet was the first to implement "Same Plane" placement to prevent the seedbed from fracturing.

  A fractured seedbed dries out quicker and leaves the potential for uneven germination.
- A firm seedbed produces good seed-to-soil contact, enabling enhanced absorption of moisture and nutrients by the seed.

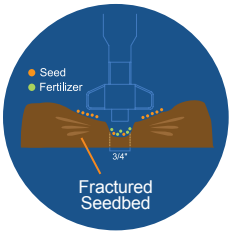

CONCERNS WITH LOWER POINT OPENERS

- Fractures the seedbed, allowing the stored moisture to escape leading to the risk of uneven germination.
- Increases the potential for seed to mix in with fertilizer as the seed rolls down the shoulder of the furrow into the fertilizer band.

CHUTE SIZE

Atom-Jet openers have the largest seed-gallery on the market.

- This allows for seeding of broader seeds such as peas and beans.
- The large chute allows the seeds to easily pass through, reducing the risk of plugging.

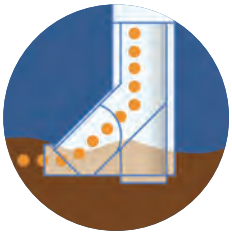

Trademarks registered by CIH Flex Hoe 800, CNH P2070 Flex Hoe, Morris Contour & Bourgault Mid-Row Banders are used with permission.
Atom-Jet openers are designed to fit OEM drills as replacement third-party products.

Why AR Steel Plate Matters For Australia

SUPERIOR IMPACT RESISTANCE

- Tough, heat treated AR steel resists cracking and chipping in rocky and abrasive soils

CONSISTENT WEAR = CONSISTENT SEEDING

- Wear gradually and evenly to maintain the opener geometry and accurate seed placement throughout its life

LONGER SERVICE LIFE

- Excellent abrasion resistance reduces replacement frequency and downtime

FIELD-SERVICE FRIENDLY

- Can be welded, or hard-faced to extend wear life—unlike cast points

DESIGNED FOR MODERN SEEDING CONDITIONS

- Precision-cut plate construction ensures accurate seed and fertilizer placement, as well as reliable ground penetration



AR plate points being tumbled

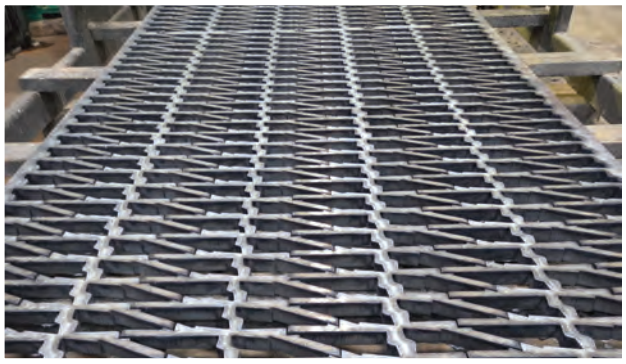

AR plate skeleton of points after being cut

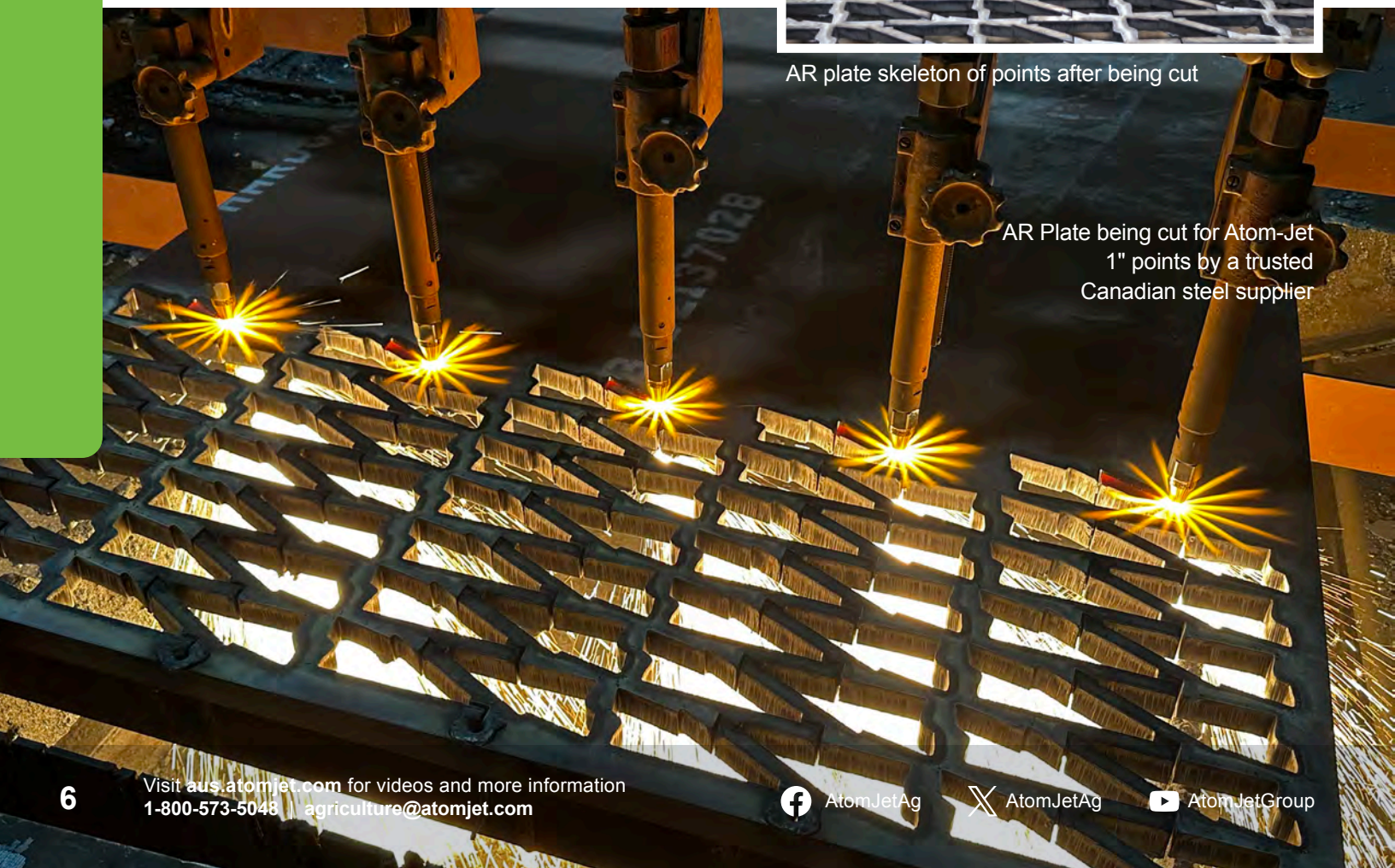

AR Plate being cut for Atom-Jet 1" points by a trusted Canadian steel supplier

Visit **aus.atomjet.com** for videos and more information
1-800-573-5048 | **agriculture@atomjet.com**

SINGLE SHOOT SPREAD

- Creates a firm seedbed
- Provides greater seedbed utilization
- Benefits wider row spacing



G GRANULAR

SINGLE SHOOT

- Accurate seed placement
- Minimal soil disturbance
- Superior soil penetration



G GRANULAR

CONSERVAPAK PAIRED ROW

- Curved paired row boot seals fertilizer trench
- Distinct paired row
- Carbide protected wings and underside increases longevity

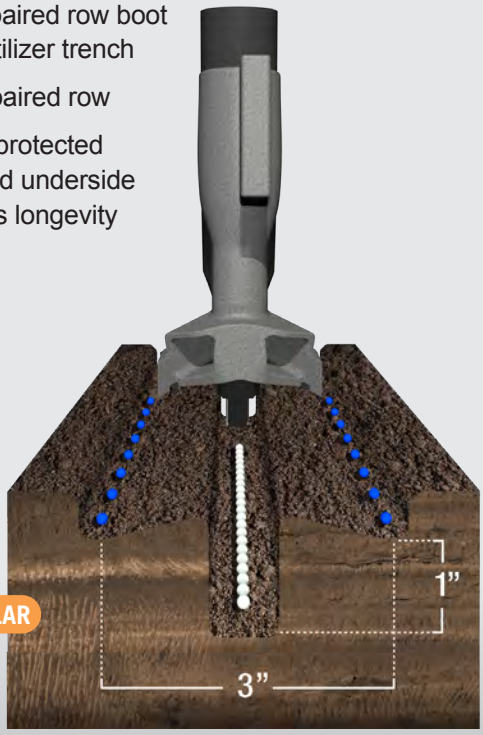

G GRANULAR
L LIQUID
N NH3

DEEP RIPPING PAIRED ROW

- Distinct paired row
- Deeper point breaks up rhizo layer to allow moisture to come up through the soil
- Carbide protected wings and underside increase longevity

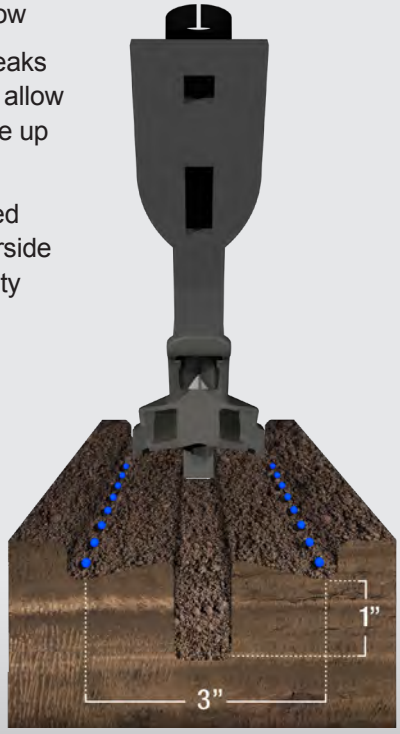

Trademarks registered by CIH Flex Hoe 800, CNH P2070 Flex Hoe, Morris Contour & Bourgault Mid-Row Banders are used with permission.
Atom-Jet openers are designed to fit OEM drills as replacement third-party products.

THINGS TO KNOW

MOUNTING HARDWARE

Atom-Jet supplies all mounting hardware with our openers. Openers come with all necessary mounting bolts, hose clamps, tops, and tubes.

To withstand the harsh conditions in Australia, Atom-Jet includes SAE Grade 9 bolts and hardened washers with our openers. This provides 25% more tensile strength than lower-grade hardware, offering a balance between durability and strength and ensuring proper joint integrity. This means your openers stay on your equipment, even in the toughest conditions.



PACKER TIRE WIDTH

When choosing the correct opener for your application needs, packer tire width plays an important role in what openers can be used effectively. When suggesting openers, we always want to make sure that there is at least 0.5" of packer tire width outside the width of the opener to ensure that planted seeds are getting adequate packing. Using too narrow a packer tire could mean that your tire is pressing down and missing packing the seed into the furrow. On the opposite side, using a packer tire that is much wider than your opener can lead to the tire riding on the untilled ground not putting any pressure down to pack the seed.

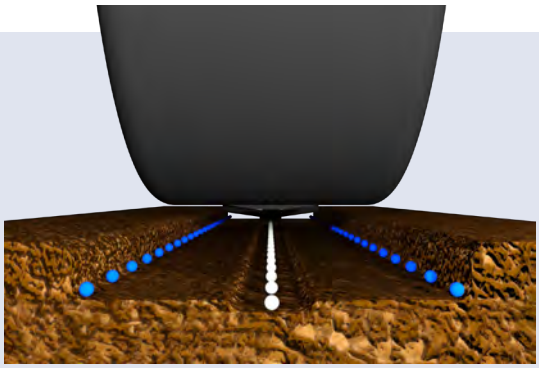

CORRECT

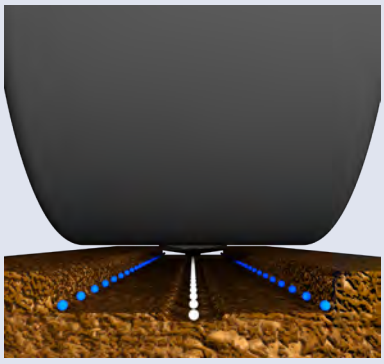

TOO WIDE

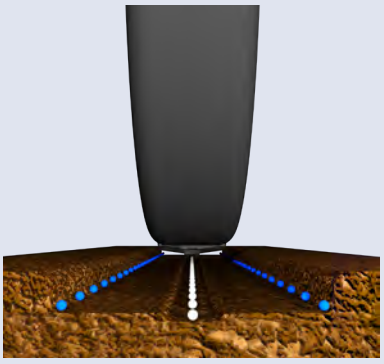

TOO NARROW

Visit **aus.atomjet.com** for videos and more information
1-800-573-5048 | **agriculture@atomjet.com**

BOLT HOLE GUIDE

Atom-Jet openers are designed to be compatible with all Morris Contour 1, Contour 2, and Quantum drills. When mounting your openers to these drills, be sure to follow the bolt hole guide shown here.

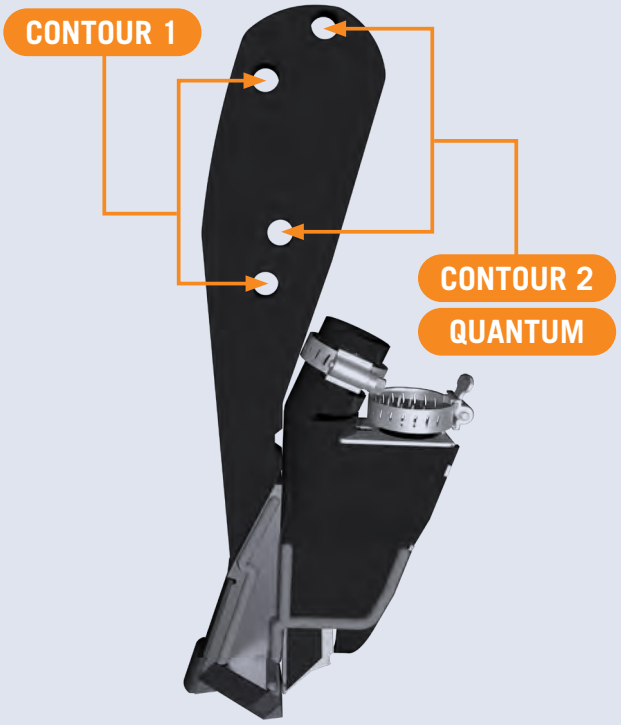

INSTALLATION



INSTALLATION GUIDES
https://agriculture.atomjet.com/australia-installation-guides/



PATENTED CARBIDE INSERT

This opener was designed after requests from our customers in dry regions who wanted an ultra-low disturbance opener. The narrow point provides less soil disturbance, which in turn helps to keep the moisture in the furrow. With the narrower point, increased side pressure from the furrow usually wears thinner points out too quickly; therefore, the Atom-Jet R&D team designed a carbide insert to keep the point from washing out on the sides. This innovation was patented (9,066,462 B2) and has proven itself in Montana and Australia where drier conditions exist.



Trademarks registered by CIH Flex Hoe 800, CNH P2070 Flex Hoe, Morris Contour & Bourgault Mid-Row Banders are used with permission.
Atom-Jet openers are designed to fit OEM drills as replacement third-party products.

SCRAPERS FOR JOHN DEERE

After releasing our line of Single and Dual Shoot scrapers for the CNH Precision disc drills, users of the John Deere 1890 line of disc drills came to us looking for a similar system.

Atom-Jet's Research and Development team has been working on a longer-lasting replacement single shoot scraper for the John Deere 1890. Optimized carbide placement, coupled with abrasion-resistant plate, makes our replacement single shoot scrapers the perfect match for this drill.

Finally, for users running the 1895 Separate Fertilizer Placement version of the drill, Atom-Jet was approached by users having issues with their OEM banding scraper mount breaking.
Our R&D team has been working to develop a stronger mounting system for this drill while also developing a new harder-wearing scraper to increase the unit's life.

We will be selling these under a limited release for spring 2027. Contact your Territory Manager for details.

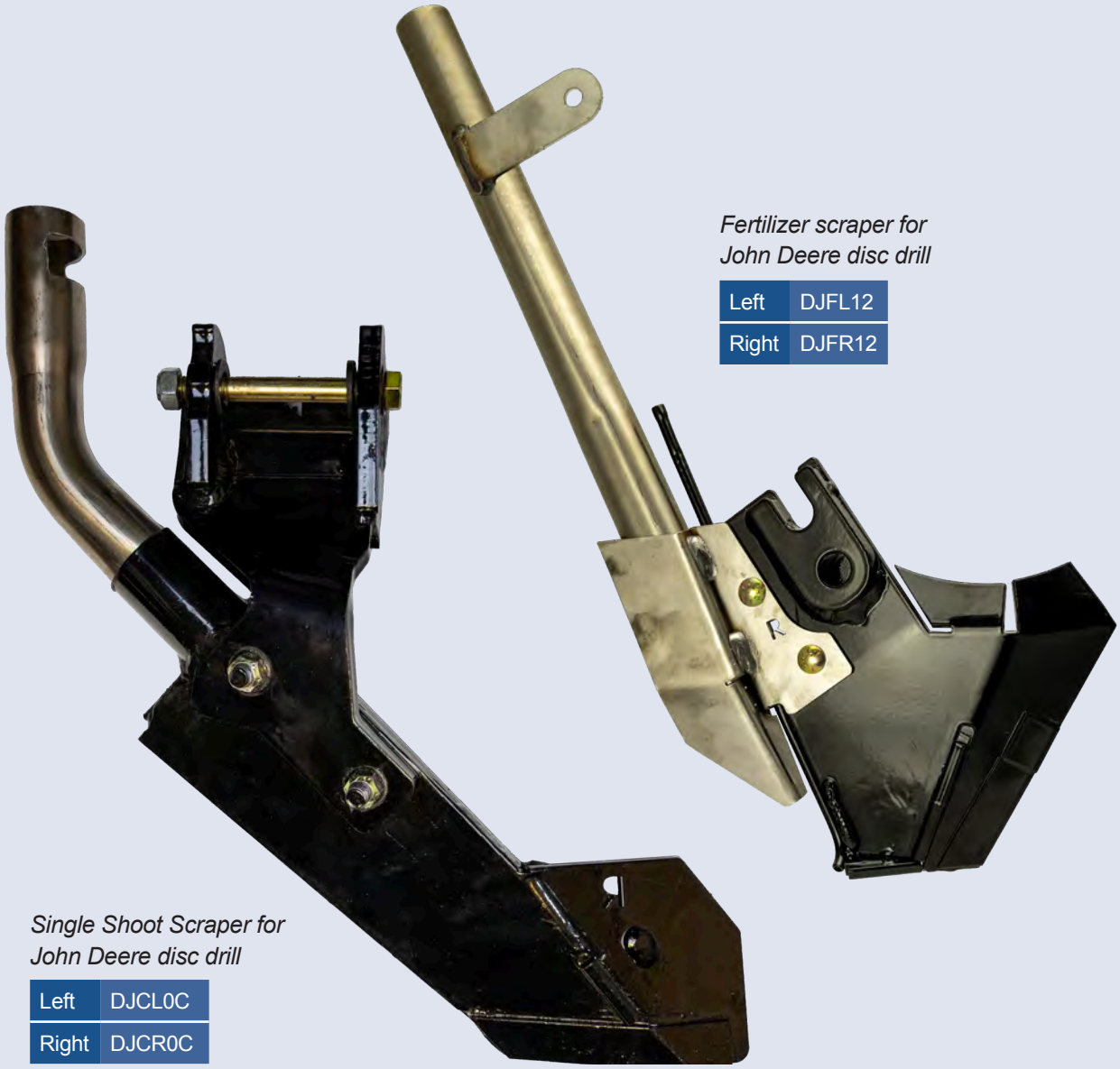

Fertilizer scraper for John Deere disc drill

Left	DJFL12
Right	DJFR12

Single Shoot Scraper for John Deere disc drill

Left	DJCL0C
Right	DJCR0C

ROW CLOSERS

Following the launch of our Row Closers for Bourgault Paralink, Atom-Jet has worked to design a set of closers for the CNH Flex Hoe and Morris Contour 1, 2, and Quantum air drills. These discs mount to the shank to catch the soil thrown by the openers and place it back into the furrow ahead of the packer tire. This allows operators to use wider openers at increased operation speeds while still leaving a smooth field finish.



Trademarks registered by CIH Flex Hoe 800, CNH P2070 Flex Hoe, Morris Contour & Bourgault Mid-Row Banders are used with permission. Atom-Jet openers are designed to fit OEM drills as replacement third-party products.

OPENERS FOR C-SHANK

Atom-Jet openers are compatible with all varieties of C-Shank drills. With 30 years of experience developing openers, you can trust Atom-Jet to provide reliable, long-lasting, and rugged openers designed for all conditions. Originally designed for zero/minimum tillage, Atom-Jet C-Shank openers work great in all tillage and seeding practices.

- All wear points are carbide protected providing extended life
- Proven not to plug in the worst conditions – opener of choice in the Red River Valley (gumbo)
- Excellent seed placement and fertilizer separation achieved by the same-plane design
- Boots are made of a high gauge steel to protect against breaking
- Compatible with all C-shank drills





We are located just outside Koolunga, SA, and have been running Atom-Jets for 15 years. In that time, we have only chipped 3 of our openers, compared to when we test competitors' openers, which were destroyed after only 20 hectares in our stony country. Our program is about 7000 acres with a lot of limestone and iron stone, some sand and also loamy country. The set we have now has done over 10,000 acres with more seasons left in them. With spacing of 12" and the rounded front of the Atom-Jet, trash flow is no issue. We like the way it places the seed right at the bottom of the seed bed, as opposed to the competitor's openers that seem to throw seed everywhere.
— Michael & Ben Heinjus, Koolunga, SA

Visit **aus.atomjet.com** for videos and more information
1-800-573-5048 | **agriculture@atomjet.com**

AtomJetAg AtomJetAg AtomJetGroup

ALL MOUNTING HARDWARE INCLUDED

C-SHANK

1/2" (13mm) SINGLE SHOOT



G GRANULAR

1/2"	CCAS00AUS

C-SHANK

3/4" (18mm) SINGLE SHOOT



G GRANULAR

3/4"	CCAA00AUS

C-SHANK

1" (25mm) SINGLE SHOOT



G GRANULAR

1"	CCAC00AUS

C-SHANK

SINGLE SHOOT SPREAD



G GRANULAR

2"	CCPTR0AUS
3"	CCBTD0AUS
4"	CCCTE0AUS

AUS part numbered openers come with 1½" ID (38mm) opener necks. For smaller 1¼" ID (32mm) necks, remove AUS from the part number.

Trademarks registered by CIH Flex Hoe 800, CNH P2070 Flex Hoe, Morris Contour & Bourgault Mid-Row Banders are used with permission.
Atom-Jet openers are designed to fit OEM drills as replacement third-party products.

C-SHANK

SIDE BAND GRANULAR



G GRANULAR

3/4"	Left	CCGAA0AUS
	Right	CCGAB0AUS
1"	Left	CCGCA0AUS
	Right	CCGCB0AUS

C-SHANK

HIGH-RATE SIDE BAND GRANULAR



G GRANULAR

3/4"	Left	CCGAXAUS0
	Right	CCGAY0AUS
1"	Left	CCGCX0AUS
	Right	CCGCY0AUS

C-SHANK

PAIRED ROW



G GRANULAR

3"	CCDTD0AUS
4"	CCETE0AUS

C-SHANK

3" (75mm) DEEP-RIPPING PAIRED ROW



3"	CCDXRAUS0

AUS part numbered openers come with 1½" ID (38mm) opener necks. For smaller 1¼" ID (32mm) necks, remove AUS from the part number.

AUSTRALIAN C-SHANK OPENERS

As Atom-Jet has worked with AG Culture and Australian farmers over the last 14 years, we have experienced the differences between Canadian farming and Australian farming. Based on feedback from farmers running our products in Australia, touring the harsh, dry conditions, limestone shelves, and non-wetting sands, we have made changes to our standard product lines to directly meet the needs of the Australian market.

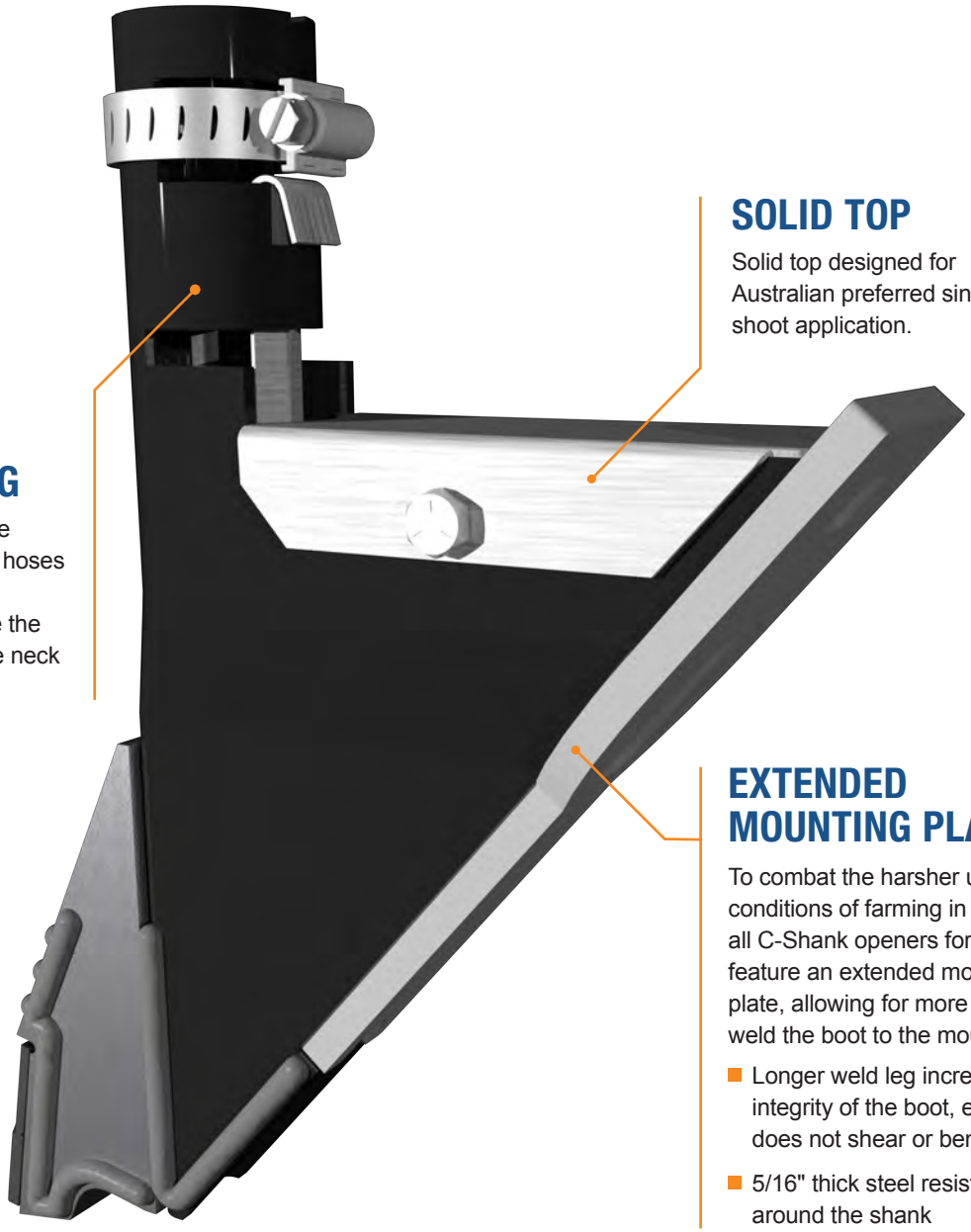

NECK (SEED TUBE) SIZING

To accommodate the larger seed delivery hoses used in Australian equipment, we have the option to expand the neck to 1¼" (32mm).

SOLID TOP

Solid top designed for Australian preferred single-shoot application.

EXTENDED MOUNTING PLATE

To combat the harsher use conditions of farming in Australia, all C-Shank openers for this region feature an extended mounting plate, allowing for more area to weld the boot to the mount.

- Longer weld leg increases the integrity of the boot, ensuring it does not shear or bend.
- 5/16" thick steel resists twisting around the shank

Trademarks registered by CIH Flex Hoe 800, CNH P2070 Flex Hoe, Morris Contour & Bourgault Mid-Row Banders are used with permission.
Atom-Jet openers are designed to fit OEM drills as replacement third-party products.

OPENERS FOR
MORRIS CONTOUR & QUANTUM

Atom-Jet openers get your crops off to the best start possible. Whether it's the Contour C1, C2, or the newly launched Quantum, Atom-Jet has the opener to fit your needs. The opener's leading-edge design maintains a true vertical position. Atom-Jet openers work in conjunction with Morris Contour's parallel linkage for ultra-precise seed and fertilizer placement, along with an improved ability to shed trash. This makes Atom-Jet openers a good fit for the Contour or Quantum drills.

- Non-plugging technology
- Simple all-steel construction improves wear and durability
- Excellent wear – all high-wear points, wings, and chutes are carbide protected
- The sleek design results in less steel running through the field, reducing draft
- Superior performance with a cost-effective opener





We are in Kainton, SA, on the Yorke Peninsula. We have been running Atom-Jets for a while now—previously, ¾" C-shank openers on our 50' Shearer and now we run ½" openers on our 70' Morris Quantum—and they have really held up to this country nicely. This is our first season with the ½" openers; there is no issue with soil throw. We probably could sow a bit faster, really. On 10" spacing, we have not had any issue with trash flow; seed placement is bangin'. We have nearly finished 1500 hectares with no issue. We can't complain, hence why we chose Atom-Jet again.
— Benno Bagshaw (Pine Grove Farm) – Kainton, SA

Visit **aus.atomjet.com** for videos and more information
1-800-573-5048 | **agriculture@atomjet.com**

AtomJetAg AtomJetAg AtomJetGroup

ALL MOUNTING HARDWARE INCLUDED

MORRIS CONTOUR
SINGLE SHOOT



G GRANULAR

¾"	CAAA00AUS
1"	CAAC00AUS

MORRIS CONTOUR
½" (13mm) SINGLE SHOOT



G GRANULAR

With patented carbide insert.
Patent #9,066,462 B2

½"	CAAS00AUS

MORRIS CONTOUR
SINGLE SHOOT SPREAD



G GRANULAR

2"	CAPTR0AUS
3"	CABTD0AUS
4"	CACTE0AUS

MORRIS CONTOUR
PAIRED ROW



G GRANULAR

3"	CADTD0AUS
4"	CAETE0AUS

AUS part numbered openers come with 1½" ID (38mm) opener necks. For smaller 1¼" ID (32mm) necks, remove AUS from the part number.

Trademarks registered by CIH Flex Hoe 800, CNH P2070 Flex Hoe, Morris Contour & Bourgault Mid-Row Banders are used with permission.
Atom-Jet openers are designed to fit OEM drills as replacement third-party products.

OPENERS FOR
BOURGAULT PARALINK

Atom-Jet's R&D team has developed our openers to fit the Bourgault Paralink drill's shank specifications. Our openers provide consistent ground penetration and constant seeding depth control over changing field terrain for fast, even germination. Atom-Jet openers work with all Bourgault Paralink drills, whether it's a 3310 PHD or all three configurations of 3320: SE, QDA, and XTC. Atom-Jet's patented Twin Band design for Paralink drills provides an option to Mid Row Banders.

Twin Band benefits vs. Mid Row Banders:

- Initial cost savings
- Safe seed & fertilizer separation at higher rates
- Ability to apply granular, liquid, and NH3 fertilizer
- Better trash clearance
- Less maintenance
- Weight saving on equipment resulting in less wear and tear on equipment
- Less HP requirements



ALL MOUNTING HARDWARE INCLUDED

BOURGAULT PARALINK

SINGLE SHOOT



G GRANULAR

1½"	CDAS00AUS
¾"	CDAA00AUS
1"	CDAC00AUS

BOURGAULT PARALINK

SINGLE SHOOT SPREAD



G GRANULAR

2"	CDPTR0AUS
3"	CDBTD0AUS
4"	CDCTE0AUS

BOURGAULT PARALINK

SIDE BAND GRANULAR



G GRANULAR

¾"	Left	CDGAA0AUS
	Right	CDGAB0AUS
1"	Left	CDGCA0AUS
	Right	CDGCB0AUS

BOURGAULT PARALINK

HIGH-RATE SIDE BAND GRANULAR



G GRANULAR

¾"	Left	CDGAX0AUS
	Right	CDGAY0AUS
1"	Left	CDGCX0AUS
	Right	CDGCY0AUS

AUS part numbered openers come with 1½" ID (38mm) opener necks. For smaller 1¼" ID (32mm) necks, remove AUS from the part number.

Trademarks registered by CIH Flex Hoe 800, CNH P2070 Flex Hoe, Morris Contour & Bourgault Mid-Row Banders are used with permission.
Atom-Jet openers are designed to fit OEM drills as replacement third-party products.

OPENERS FOR
CNH FLEX HOE

Atom-Jet openers perform well with the patented true parallel link row unit on the New Holland P2070 and CIH 800. The design angle of the opener works in relation to the soil surface providing a consistent seed depth and faster, uniform crop emergence. The narrow profile of Atom-Jet openers results in smoother field finish and superior trash clearance. The carbide-protected opener improves the life of the opener in all conditions. The opener is an excellent choice for these CNH drills.

- Same-plane technology improves disturbance with accurate seed placement
- Designed not to plug in different soil conditions
- Opener selection to meet all needs – Single & Double shoot / Liquid, Granular & NH3 fertilizers applications
- Improved opener performance with significant cost savings



CNH FLEX HOE

SIDE BAND GRANULAR



G GRANULAR

3/4"	Left	CBGAA0AUS
	Right	CBGAB0AUS
1"	Left	CBGCA0AUS
	Right	CGBCB0AUS

Visit **aus.atomjet.com** for videos and more information
1-800-573-5048 | **agriculture@atomjet.com**

AtomJetAg AtomJetAg AtomJetGroup

ALL MOUNTING HARDWARE INCLUDED

CNH FLEX HOE
SINGLE SHOOT



G GRANULAR

½"	CBAS00AUS
¾"	CBAA00AUS
1"	CBAC00AUS

CNH FLEX HOE
SINGLE SHOOT SPREAD



G GRANULAR

2"	CBPTR0AUS
3"	CBBTD0AUS
4"	CBCTE0AUS

CNH FLEX HOE
HIGH-RATE SIDE BAND



G GRANULAR

¾"	Left	CBGAX0AUS
	Right	CBGAY0AUS
1"	Left	CBGCX0AUS
	Right	CBGCY0AUS

CNH FLEX HOE
PAIRED ROW



G GRANULAR

3"	CBDTD0AUS
4"	CBETE0AUS

AUS part numbered openers come with 1½" ID (38mm) opener necks. For smaller 1¼" ID (32mm) necks, remove AUS from the part number.

Trademarks registered by CIH Flex Hoe 800, CNH P2070 Flex Hoe, Morris Contour & Bourgault Mid-Row Banders are used with permission.
Atom-Jet openers are designed to fit OEM drills as replacement third-party products.

OPENERS FOR
CONCORD / CIH 700 / NH 2060 EDGE ON

Atom-Jet Edge On openers that fit your Concord are ideal for every condition of soil, including gumbo. Our non-plugging technology has been a benefit to farmers running this drill. Atom-Jet openers are compatible with row closers with the use of a shank extension and are an excellent fit with the Concord drill.

- Front delivery – placing the seed directly behind the point giving accurate seed placement
- Smooth vertical design allowing trash to clear
- Non-plugging in all types of different soils
- Carbide protection on all high wear areas

For Concord air drills that use a C-Shank instead of an Edge-On, use the part numbers found in the C-Shank section.





We are based in Clements Gap, South Australia, and have been using our Atom-Jets for three seasons, doing 4000 acres a season, and they have hardly blemished. We run the 4" spread on our Concord bar. Our fuel consumption has dropped by half compared to when we ran our previous openers. Our tractor used to run at nearly 100% horsepower at 1950 rpm all the time, now it's more like 50%-55% hp at 1650 rpm. We have a mix of ironstone, sandhills and loamy country. In the dryer years, when you only have moisture on the seed bed, it places the seed right on the seed bed, and you get better germination, as opposed to before getting a blend of dry dirt in the furrow. No issue with chemical through; we sow at 9 km/h, and the crops consistently come up nice and even. We love'm!!! — **Craig, Nicholas, & Darcy Stringer, Clements Gap SA**

Visit **aus.atomjet.com** for videos and more information
1-800-573-5048 | agriculture@atomjet.com
AtomJetAg AtomJetAg AtomJetGroup

ALL MOUNTING HARDWARE INCLUDED

CONCORD EDGE ON
SINGLE SHOOT



G GRANULAR

¾"	CHAA00AUS
1"	CHAC00AUS

CONCORD EDGE ON
SINGLE SHOOT SPREAD



G GRANULAR

3"	CHBTD0AUS
4"	CHCTE0AUS

CONCORD EDGE ON
SIDE BAND GRANULAR



G GRANULAR

¾"	Left	CHGAA0AUS
	Right	CHGAB0AUS
1"	Left	CHGCA0AUS
	Right	CHGCB0AUS

CONCORD EDGE ON
PAIRED ROW



G GRANULAR

3"	CHDTD0AUS
4"	CHETE0AUS

AUS part numbered openers come with 1½" ID (38mm) opener necks. For smaller 1¼" ID (32mm) necks, remove AUS from the part number.

Trademarks registered by CIH Flex Hoe 800, CNH P2070 Flex Hoe, Morris Contour & Bourgault Mid-Row Banders are used with permission.
Atom-Jet openers are designed to fit OEM drills as replacement third-party products.

OPENERS FOR MORRIS MAXIM

Atom-Jet openers are the optimal match for Morris Maxims I and II. The land following ability of the Maxim drill with the benefit of a flexible frame provides seeding accuracy and dependability with locked-in depth control. The use of Atom-Jet openers will maximize seed-to-soil contact based on packer width and shank spacing options.

- Front delivery – placing the seed directly behind the point giving accurate seed placement
- Smooth vertical design allowing trash to clear
- Reliable, rugged opener with all-steel construction
- Designed to allow for control of different seeding depths

For Morris Maxim drills that use a C-Shank instead of an Edge-On, order using the part numbers found in the C-Shank section.



MORRIS MAXIM

HIGH-RATE SIDE BAND



G GRANULAR

3/4"	Left	CDGAX0AUS
	Right	CDGAY0AUS
1"	Left	CDGCX0AUS
	Right	CDGCY0AUS

Visit **aus.atomjet.com** for videos and more information
1-800-573-5048 | **agriculture@atomjet.com**

AtomJetAg AtomJetAg AtomJetGroup

ALL MOUNTING HARDWARE INCLUDED

BOURGAULT PARALINK

SINGLE SHOOT



G GRANULAR

¾"	CDAA00AUS
1"	CDAC00AUS

MORRIS MAXIM

SINGLE SHOOT SPREAD



G GRANULAR

2"	CDPTR0AUS
3"	CDBTD0AUS
4"	CDCTE0AUS

MORRIS MAXIM

SIDE BAND GRANULAR



G GRANULAR

¾"	Left	CDGAA0AUS
	Right	CDGAB0AUS
1"	Left	CDGCA0AUS
	Right	CDGCB0AUS

MORRIS MAXIM

PAIRED ROW



G GRANULAR

3"	CDDTD0AUS
4"	CDETE0AUS

AUS part numbered openers come with 1½" ID (38mm) opener necks. For smaller 1¼" ID (32mm) necks, remove AUS from the part number.

Trademarks registered by CIH Flex Hoe 800, CNH P2070 Flex Hoe, Morris Contour & Bourgault Mid-Row Banders are used with permission.
Atom-Jet openers are designed to fit OEM drills as replacement third-party products.

OPENERS FOR
JOHN DEERE 1870 CONSERVAPAK

The John Deere 1870 ConservaPak drill was developed to provide consistent depth control for enhanced seed and fertilizer placement. Individual hydraulic settings were designed to allow independent downforce for a more uniform depth across the width of the frame. Atom-Jet developed the new ½" fertilizer knife based on farmers requesting a longer lasting knife that can run at the required depths.

- The ½" narrow banding profile maintains the low disturbance and superior furrow closing expected from a ½" knife
- Tungsten carbide protected point made of abrasion resistant steel plate



JOHN DEERE 1870 CONSERVAPAK

SINGLE SHOOT SEED BOOT

CPAA00

Visit **aus.atomjet.com** for videos and more information
1-800-573-5048 | **agriculture@atomjet.com**

AtomJetAg AtomJetAg AtomJetGroup

JOHN DEERE 1870 CONSERVAPAK

3" PAIRED ROW SEED BOOT



3" CPD000

JOHN DEERE 1870 CONSERVAPAK

4" PAIRED ROW SEED BOOT



4" CPE000

PAIRED ROW CUP

Our Paired Row cup is specially designed with a curved underside to help close the fertilizer trench to prevent nitrogen burn. The added carbide wear tiles on the underside of the cup protect against the additional pressure of forcing the furrow closed. With our standard carbide protection on the leading edge of the wings, and a high chrome cast material, this opener will outlast the OEM.

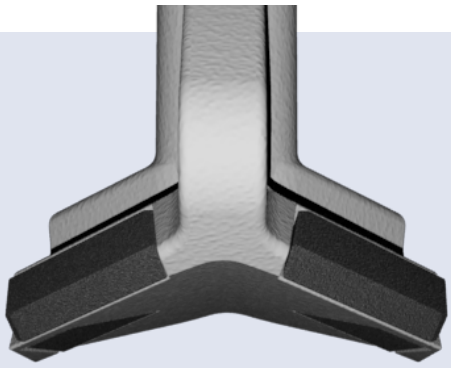

Trademarks registered by CIH Flex Hoe 800, CNH P2070 Flex Hoe, Morris Contour & Bourgault Mid-Row Banders are used with permission.
Atom-Jet openers are designed to fit OEM drills as replacement third-party products.

ALL MOUNTING HARDWARE INCLUDED

JOHN DEERE 1870 CONSERVAPAK

½" FERTILIZER KNIFE GRANULAR



G GRANULAR

CPAW00

JOHN DEERE 1870 CONSERVAPAK

½" FERTILIZER KNIFE GRANULAR & NH3



G GRANULAR

N NH3

1/4" Tube	CPAW12
3/8" Tube	CPAW13
1/2" Tube	CPAW14

JOHN DEERE 1870 CONSERVAPAK

½" FERTILIZER KNIFE LIQUID



L LIQUID

1/4" Tube	CPAW32
3/8" Tube	CPAW33
1/2" Tube	CPAW34

JOHN DEERE 1870 CONSERVAPAK

CARBIDE MUD SCRAPER

In addition to our opener and fertilizer knife replacements for the ConservaPak air drill, we have developed a carbide-protected mud scraper add-on to keep your packer tires clean.

- Long lasting carbide protection
- Easy installation
- OEM replacement

CPMS00



Visit **aus.atomjet.com** for videos and more information
1-800-573-5048 | **agriculture@atomjet.com**

AtomJetAg AtomJetAg AtomJetGroup



We are just out of Owen, South Australia, on about 3000 acres and we use the Atom-Jet paired row opener on our John Deere bar. We are in our third year of running this opener and it's showing very little signs of wear, we estimate we will get many years use out of this set. What we like about them is the way they cut through the soil and not throw as much, as opposed to bulldozing the soil like our previous openers did. Our country is mainly heavy loam, with sandy loam further south. Our old openers would leave the paddock looking like corrugated iron with no flat spots in between the rows, now with the Atom-Jets they cut better and we have flat spot in between rows making a much better field finish. Seed placement is a lot better as well, it actually cuts a shelf for the seed to sit on, most brands advertise how the seed is placed but results vary, the Atom-Jets actually do what they advertise with consistent seed placement.
— Brayden & John Harkness, Owen, SA

Trademarks registered by CIH Flex Hoe 800, CNH P2070 Flex Hoe, Morris Contour & Bourgault Mid-Row Banders are used with permission.
Atom-Jet openers are designed to fit OEM drills as replacement third-party products.

AUSTRALIAN PRODUCTS

Australian farming demands equipment built for extreme conditions - conditions Atom-Jet understands firsthand. With over 14 years of experience working alongside AG Culture and Australian growers, we've gone beyond exporting standard equipment. Through extensive field exposure, on-farm feedback and real-worldperformance data, Atom-Jet has purpose-engineered product enhancements to tackle Australia's dry climates, limestone shelves, and non-wetting sands. The result is robust, reliable equipment, designed specifically to deliver consistent results in the toughest Australian environments





We are in Balaklava, South Australia.We have been running the Atom-Jets on our Horwood Bagshaw for quite a while now and are very impressed with them. We are onto our second set now. Even with a few hard years of dry sowing, our previous set did five seasons, and we crop roughly 10,000 acres. So that's about 50,000 acres on one set. This is why we opted to go with Atom-Jet again, as there are not too many openers around that you can get that many acres out of. Our country is a mix of heavy red clay to the east; to the south is limestone, with some parts having very little dirt covering the stone; we have some drifty sand hills and some grey loamy country as well. The Atom-Jet openers have worked in all soil types really well. The 1" points go well in the rocky ground and glides up and over rocks rather than ripping them up. The round front on these openers works great for trash flow; we have no issues going straight into standing stubble, and the seed depth is perfect. Wherever you sit, the opener is exactly where the seed is going to be.
— Matt & Jamie Tiller, Balaklava, SA

Visit **aus.atomjet.com** for videos and more information
1-800-573-5048 | **agriculture@atomjet.com**

AtomJetAg AtomJetAg AtomJetGroup

ALL MOUNTING HARDWARE INCLUDED

AUSPLOW

DEEP RIPPER BLADE



6"	KD6000
7"	KD7000
8"	KD8000
9"	KD9000

C-SHANK

3" (75mm) DEEP RIPPING PAIRED ROW



CCDXR0

BOURGAULT PARALINK

3" (75mm) DEEP RIPPING PAIRED ROW



CDDXR0

HORSCH

SINGLE SHOOT



CSAS00

Trademarks registered by CIH Flex Hoe 800, CNH P2070 Flex Hoe, Morris Contour & Bourgault Mid-Row Banders are used with permission.
Atom-Jet openers are designed to fit OEM drills as replacement third-party products.

HYDRAULIC SYSTEMS CLOSED-CENTER

FOR HIGH-DEMAND APPLICATIONS

Our Closed-Center, Load-Sensing systems match the capacity delivered by the pump to the load requirements. This allows for an increased range of flow without the headaches of overheating issues. Providing an additional 40 gpm at 3,000 psi when operating at 2,100 engine rpm, we ensure you won't be left short when you need power.

- Compatible with:
  - Air Cart Fans
  - Sprayers
  - Grain Carts
  - Active Shank Drills
- In-Cab Flow Control











Visit **aus.atomjet.com** for videos and more information
1-800-573-5048 | **agriculture@atomjet.com**

AtomJetAg AtomJetAg AtomJetGroup





TRACTOR MODELS AVAILABLE

Versatile	750, 800, 825, 835, 850, 855, 875, 895, 945, 955, 975
Ford/Versatile Designation 6	936, 946, 956, 976 (with 855 Cummins Engine only)
Case STX (2001-11 model years)	375, 380, 425, 430, 450, 480, 500, 530
Case Steiger	380, 385, 430, 435, 480, 485, 530, 535
New Holland (2001-11 model years)	TJ 375, TJ 380, TJ 425, TJ 430, TJ 450, TJ 480, TJ 500, TJ 530, T9030, T9040, T9050, T9060

OPTIONAL UPGRADES

Quick Couplers	¾" standard; ½" optional
Heat Exchanger	Radiator Mounted or Electric Fan Blown

Hydraulic Kits are available only for listed models.

SYSTEM SPECIFICATIONS

Type	Closed-Center, Load-Sensing
Hydraulic Flow	40 gallons per minute at 2,100 engine rpm
Maximum Pressure	3,000 Pound Per Square Inch
Control Valving	Proportional Spool
Control Type	12 VDC Proportional Joystick
Hydraulic Reservoir	**Versatile Tractors:** Add-On 30 Gallon Capacity **All Others:** Existing Reservoir

Trademarks registered by CIH Flex Hoe 800, CNH P2070 Flex Hoe, Morris Contour & Bourgault Mid-Row Banders are used with permission.
Atom-Jet openers are designed to fit OEM drills as replacement third-party products.

HYDRAULIC SYSTEMS OPEN-CENTER

FOR BASIC APPLICATIONS

Our Open-Center hydraulic system provides an economical solution for custom designed single-motor applications that only require one set of quick couplers.

This system is complete with in-cab joystick control and can be specifically matched to your application with flow ranges of 23 and 26 gpm at 3,000 psi when working at 2,100 engine rpm.

Whether it's driving an air fan or controlling a water pump, our Open-Center applications can be designed to address a variety of needs.



WING ISOLATION KIT

- Raise and lower the left and right wing sections independently
- Assists in avoiding overhead obstacles during transport
- In-cab controller allows for quick and simple operation
- Interrupts the existing wing hydraulic circuits

HD-WINGISOKIT





Visit **aus.atomjet.com** for videos and more information
1-800-573-5048 | **agriculture@atomjet.com**

AtomJetAg AtomJetAg AtomJetGroup





TRACTOR MODELS AVAILABLE

Versatile	750, 800, 825, 835, 850, 855, 875, 895, 945, 955, 975 Models 750-850 Series 2 1976 and newer. Series 3 1982-84.
Ford/Versatile Designation 6	936, 946, 956, 976 (with 855 Cummins Engine Only)

OPTIONAL UPGRADES

Quick Couplers	¾" standard; ½" optional
Heat Exchanger	Radiator Mounted or Electric Fan Blown
Tractors With Dozer Blades	Versatile Kits Can Be Supplied Without Reservoir If Tractors Are Equipped With A Dozer Blade

Hydraulic Kits are available only for listed models.

SYSTEM SPECIFICATIONS

Type	Open-Center
Hydraulic Flow	23 & 26 Gallons Per Minute Configurations
Maximum Pressure	3,000 Pounds Per Square Inch
Control Valving	Proportional Spool
Control Type	12 VDC Proportional Joystick
Hydraulic Reservoir	**Versatile Tractors:** Add-On 30-Gallon Capacity **All Others:** Existing Reservoir

Trademarks registered by CIH Flex Hoe 800, CNH P2070 Flex Hoe, Morris Contour & Bourgault Mid-Row Banders are used with permission.
Atom-Jet openers are designed to fit OEM drills as replacement third-party products.

PARTS & ACCESSORIES





C-Shank top.
CZTA00



Edge On top.
CZTB00



Bourgault Paralink shim.
CZNA00



Focus strip.
CZLFF0



Solid C-Shank top.
CZTD00



GR8 ½" × 2½" carriage bolt, lock nut, washer.
CZM0AA



GR8 ⅜" x 2¼" carriage bolt, lock nut.
CZM0AB



C-Shank bolt holder for John Deere.
CZMFBH



¼" shim for a 54° shank.
CZNJ00



3/16" shim for a 47° shank.
CZNK00



Row Closer Spring
Left RCSPRINGLF
Right RCSPRINGRT



Spread Seed Director
SEEDDIRECTOR

NOTES

Trademarks registered by CIH Flex Hoe 800, CNH P2070 Flex Hoe, Morris Contour & Bourgault Mid-Row Banders are used with permission.
Atom-Jet openers are designed to fit OEM drills as replacement third-party products.

CUSTOMER ORDER FORM

agculture
INTELLIGENT FARM SOLUTIONS

AG Culture Pty Ltd
PO Box 60
Kadina SA 5554

ABN: 629 768 010
ACN: 629 768 010
Gav Wilson 0447 253 264
sales@agculture.com.au
gavin@agculture.com.au

Date Ordered _____ PO Number _____

Manufacturer Atom-Jet Industries

Trading Name _____

Contact Person _____

Address _____

_____ Post Code _____

Email _____

ABN _____

Mobile No. _____ Phone No. _____

Signature _____ Date _____

PRODUCT CODE	QTY	DESCRIPTION	PRICE

OFFICE USE ONLY			
Inv. #	Date: / /	Inv. $	Emailed or Posted

Visit **aus.atomjet.com** for videos and more information
1-800-573-5048 | **agriculture@atomjet.com**

AtomJetAg AtomJetAg AtomJetGroup

Atom-Jet Industries 2-Year Limited Warranty – Ag Products
Atom-Jet Industries 1-Year Limited Warranty – Hydraulic Systems

Atom-Jet Industries (2002) Ltd. warrants each new product to be free from defects in material and workmanship. This warranty is applicable only for the normal service life expectancy of the product or components, not to exceed 24 consecutive months (12 consecutive months for hydraulic systems) from the date of delivery of product to the original purchaser. Proof of purchase is required. Warranty is limited to the replacement of the failed product.

Under no circumstances will the warranty cover any products or components thereof, which, in the opinion of the company, has been subject to misuse, unauthorized modification, alteration, and accident or if repairs have been made with parts other than those obtainable through Atom-Jet Industries (2002) Ltd.

Our obligation under this warranty shall be limited to repairing or replacing, free of charge to the original purchaser, any part that, in our judgment, shall show evidence of such defect, provided further that such part, if so requested shall be returned within forty-five (45) days from date of failure to Atom-Jet Industries (2002) Ltd. routed though the dealer and/or distributor from whom the purchase was made, transportation charges prepaid.

This warranty shall not interpret to render Atom-Jet Industries (2002) Ltd. or dealer liable for injury or damages of any kind or nature to person or property. This warranty does not extend to the loss of crops, loss due to delay in harvest, or any expense or loss incurred for labor, substitute machinery, rental or other reason.

Except as set forth above, Atom-Jet Industries (2002) Ltd. shall have no obligation or liability of any kind on account of any of its equipment and shall not be liable for special or consequential damages. Atom-Jet Industries (2002) Ltd. makes no other warranty, expressed or implied, and, specifically, Atom-Jet Industries (2002) Ltd. disclaims any implied warranty.

This warranty is subject to any existing conditions of supply which may directly affect our ability to obtain materials or manufacture replacement parts.

Atom-Jet Industries reserves the right to make improvements in design or changes in specifications at any time, without incurring any obligation to owners of units previously sold.

No one is authorized to alter, modify or enlarge this warranty nor the exclusion, limitations and reservations of the warranty stated above.

Disclaimer: Atom-Jet Industries reserves the right to make improvements in design and changes in specifications at any time without notice and without incurring any obligation to install them on units previously sold. Specifications, descriptions and illustrative material herein are as accurate as known at the time of publication but are subject to change without notice.

With double shoot openers, the placement of the seed and fertilizer is very important. The amount of fertilizer that can be applied with any double shoot opener depends to a great extent on the degree of separation between the fertilizer and the seed, but also depends on a number of other variables such as the amount of moisture in the soil, the amount of organic matter in the soil, the soil type and the type of crop being seeded. It is our policy that we do not recommend or endorse specific “safe” rates of fertilizer for our double shoot openers. We suggest that producers consult with their local agronomist for their expertise on specific fertilizer rates for their application.



Stay in touch with Atom-Jet Group by scanning the QR code to join our email list to receive special offers and news.
Or visit ***agriculture.atomjet.com/email-sign-up***

AtomJetAg

AtomJetAg

AtomJetGroup

2110 PARK AVENUE, BRANDON, MANITOBA, CANADA R7B 0R9
PHONE: 1-800-573-5048 | FAX: 204-726-5734 | EMAIL: AGRICULTURE@ATOMJET.COM | AUS.ATOMJET.COM

Leech Group 363787 / 365162